J-CXS

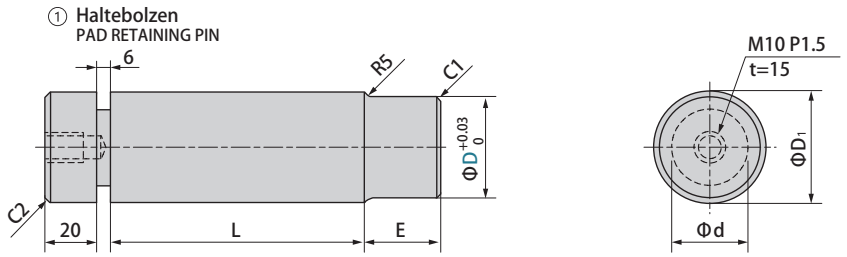

J-CXW

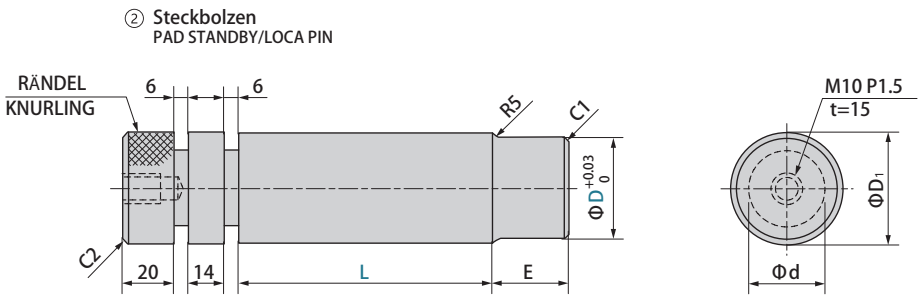

J-CXSPA

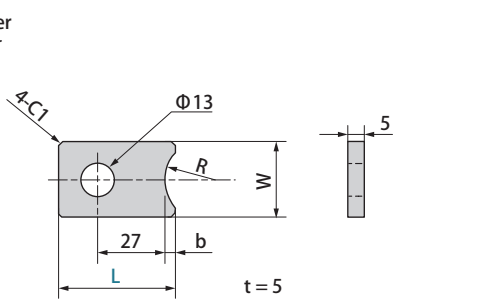

45（HRC28~32）

Q235

Bestell-Nr. Catalog No.	D	L	D_1 e9		d	E	S	Zulässige Belastung / max. load N (kgf)	
								Sicherheitsfaktor 40 Safety factor 40	Sicherheitsfaktor 5 Safety factor 5
J-CXS J-CXW	20	40	22	-0.040 -0.092	14	25	35	581 (59)	4650 (474)
		60							
		80							
	30	60	32	-0.050 -0.112	20		38	1962 (200)	15692 (1600)
		80							
		100							
	40	60	42		30	30	43	4650 (474)	37196 (3793)
		80							
		100							
		120							
	50	80	52		40		48	9081 (926)	72649 (7408)
		100							
		120							
	60	100	62	-0.060 -0.134	50	35	53	15692 (1600)	125538 (12801)
		120							
		140							
	70	120	72		60		58	24919 (2541)	199350 (20328)
		140							
		160							

Stopper

Stopper

Bestell-Nr. Catalog No.	Stopper				D
	R	W	L	b	
J-CXSPA20	20	30	46	4	20
					30
					40
J-CXSPA35	35	50	49	7	50
					60
					70

Bestellnummer / Order Number

Bestellnr. / Catalog No.	-	D	-	L
J-CXS	-	**30**	-	**60**
J-CXW	-	**40**	-	**120**

E-CXW

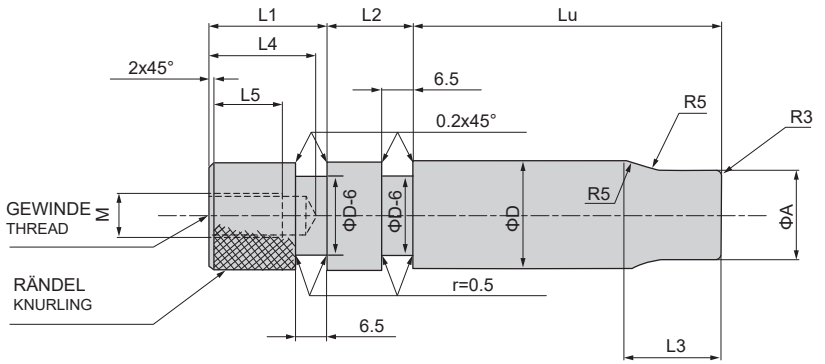

Material : 42CrMo

Material : 42CrMo

DFM LEM	ΦA	ΦDh11	L1	L2	L3	Lu	M	L4	L5
E-CXW23-81	23	25	22	20	19	81	M8	25	15
E-CXW23-98						98			
E-CXW30-103	30	32	22	25	26	103			
E-CXW30-148						148			
E-CXW38-132	38	40	32	32	33	132	M10	32	20
E-CXW38-192						192			
E-CXW48-165	48	50	32	40	41	165			
E-CXW48-220						220			
E-CXW61-210	61	63	32	50	51	210	M12	40	25
E-CXW61-250						250			

SICHERUNGSRING

SECURING DISC

Bestell-Nr. Catalog No.
E-CXSP30

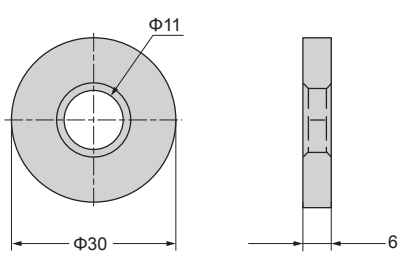

Material:Q235
Verwendung für E-CXS und E-CXW

Material:Q235
Use for E-CXS and E-CXW

Bestellnummer / Order Number

Bestellnr. / Catalog No.

E-CXSP30-98

E-CXS

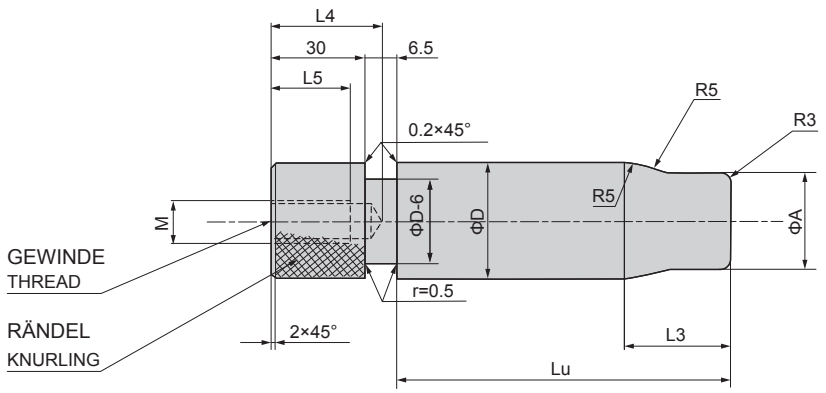

Material : 42CrMo

Material : 42CrMo

Bestell-Nr. Catalog No.	Φ A	Φ Dh11	L3	Lu	M	L4	L5
E-CXS18-81	18	20	19	81	M8	25	15
E-CXS23-81	23	25	19	81			
E-CXS23-98				98			
E-CXS30-103	30	32	26	103			
E-CXS30-148				148			
E-CXS38-132	38	40	33	132	M10	32	20
E-CXS38-192				192			
E-CXS48-165	48	50	41	165			
E-CXS48-220				220			
E-CXS61-210	61	63	51	210	M12	40	25
E-CXS61-250				250			
E-CXS78-210	78	80	51	210	M12	40	25

Bestellnummer / Order Number

Bestellnr. / Catalog No.

E-CXS23-81

NA-CXS

Material : 42CrMo
Zugfestigkeit : 865MPa
Streckgrenze : 860MPa

Material: 42CrMo
Tensile strength: 865MPa
Yield strength: 860MPa

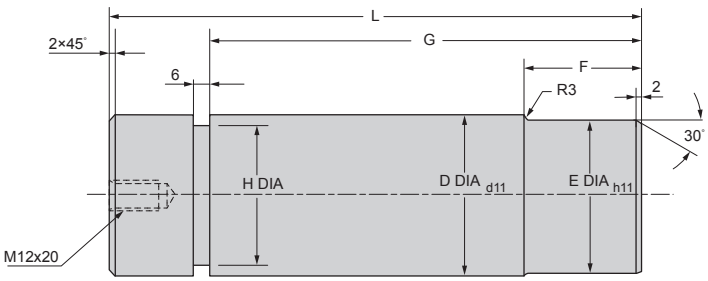

Bestellnummer / Order Number

Bestellnr. / Catalog No.

NA-CXS35-130

Bestell-Nr. Catalog No.	D	E	F	G	H	L
NA-CXS25-110	25	22	25	75	17	110
NA-CXS35-130	35	32	30	95	27	130
NA-CXS50-170	50	47	35	135	42	170
NA-CXS63-210	63	60	45	170	55	210

NA-CXW

Material : 42CrMo
Zugfestigkeit : 865MPa
Streckgrenze : 860MPa

Material : 42CrMo
Tensile strength : 865MPa
Yield strength : 860MPa

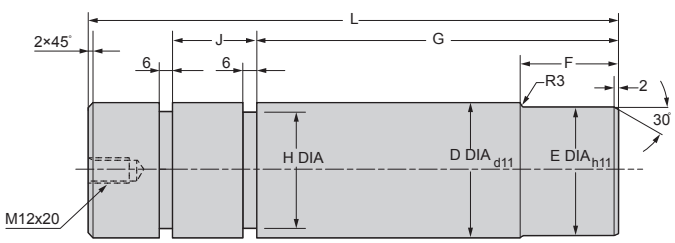

Bestell-Nr. Catalog No.	D	E	F	G	H	J	L
NA-CXW25-130	25	22	25	75	17	20	130
NA-CXW35-155	35	32	30	95	27	25	155
NA-CXW50-200	50	47	35	135	42	30	200
NA-CXW63-250	63	60	45	170	55	40	250

SICHERUNGSRING

SECURING DISC

Material / Material :Q235
Verwendung für NA-CXS
und NA-CXW
Use for NA-CXS
and NA-CXW.

Catalog No.
NA-CXSP32

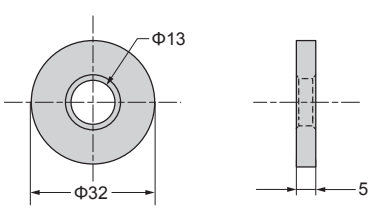

Bestellnummer / Order Number

Bestellnr. / Catalog No.

NA-CXW35-155

WDX22-60-12265

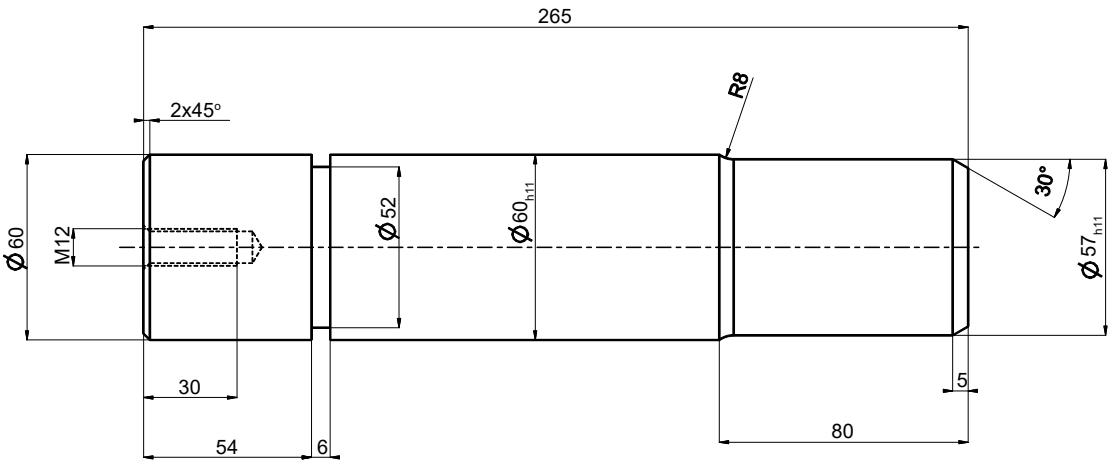

Material: C45K 1.0503

Bestellnummer / Order Number

Bestellung
Order

Katalog-Nr. / Catalog No.	L
WDX22-60-12	265

WDX22-60-1201

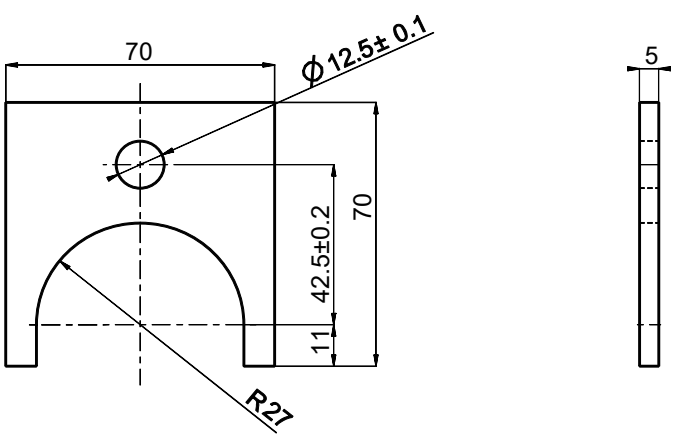

Material: S235JRG2C+C 1.0122

Bestellnummer / Order Number

Bestellung
Order

Katalog-Nr. / Catalog No.
WDX22-60-1201